Annals of Science

ISSN: 0003-3790 (Print) 1464-505X (Online) Journal homepage: https://www.tandfonline.com/loi/tasc20

A note on Leslie's cube in the study of radiant heat

Richard G. Olson A.M. Ph.D.

To cite this article: Richard G. Olson A.M. Ph.D. (1969) A note on Leslie's cube in the study of radiant heat, Annals of Science, 25:3, 203-208, DOI: 10.1080/00033796900200111

To link to this article: https://doi.org/10.1080/00033796900200111

Published online: 22 Aug 2006.

Submit your article to this journal

Article views: 108

View related articles

Citing articles: 2 View citing articles

Full Terms & Conditions of access and use can be found at
https://www.tandfonline.com/action/journalInformation?journalCode=tasc20

A NOTE ON LESLIE'S CUBE IN THE STUDY OF RADIANT HEAT

By RICHARD G. OLSON, A.M., PH.D.*

IN 1804 John Leslie (1766–1832) introduced a new instrument for the study of the characteristics of radiant heat.[1] The instrument, which came to be known as Leslie's Cube (Fig. 1) was simply a cubical tin vessel, the sides of which were coated with different materials. By filling the Cube with ice, hot water or hot oil at determinate temperatures measured by an ordinary thermometer, Leslie produced a heat source which allowed him to study the properties of radiation from various surfaces at temperatures ranging from 0° C to over 200° C.

This simple instrument had amazing staying power; it retained a place in the forefront of radiant heat studies for more than eighty years[2] and in scientific pedagogy for almost a century and a half.[3]

At least two of the problems which Leslie studied with the help of his Cube and presented in his *Experimental Inquiry* were so well discussed that his results entered the domain of the accepted corpus of physical knowledge as finished products. The first of these problems involved the angular dependence of the intensity of radiation from a surface element. Through a series of experiments involving both cubical and cylindrical heat sources, Leslie very carefully showed that the intensity of radiation

* Assistant Professor of History, University of California at Santa Cruz, Santa Cruz, California.

[1] J. Leslie, *An Experimental Inquiry into the Nature and Propagation of Heat*, London, 1804, pp. 1–3.

[2] In 1886, S. P. Langley used a Leslie's Cube to obtain radiation for studying the index of refraction of rock salt in the far infra-red. This is the last application of the Cube in original research that I have been able to find. See S. Langley, *Phil. Mag.*, 1886, **22**, 149–173.

[3] The most recent reference I have found in a textbook on heat appears in G. Noakes, *A Textbook of Heat* (London, 1947), p. 373. The reference discusses the use of Leslie's Cube to establish the identity of emissive and absorptive coefficients. I am informed that there is a later discussion of *Leslie's Cube* in R. C. Brown's *Text Book of Physics* (Longmans, 1961), pp. 533 ff.

from a surface is proportional to the orthogonal projection of the surface onto the plane perpendicular to the direction of propagation.[4] Stated in a more common form, the intensity of heat radiation is proportional to the sine of the angle between the normal to radiating surface and the direction of the rays in question. During the first third of the nineteenth century, Leslie's reputation was in large measure dependent on this discovery; but for some obscure reason the result was completely divorced from his name and his experimental procedure by mid-century.[5]

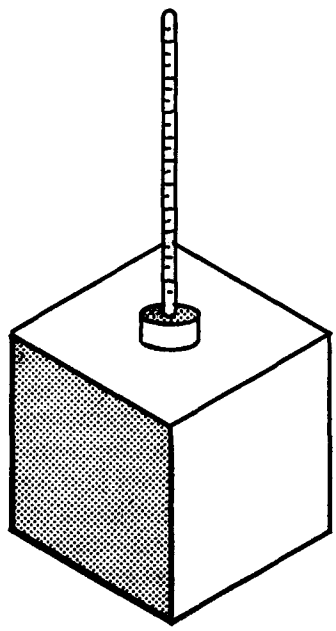

Figure 1. Leslie's Cube.

The second well-established result generated by Leslie with the help of his Cube is that the radiating power of any surface is dependent on such factors as the chemical nature, the colour, and the degree of roughness or polish of the surface. In particular, Leslie showed that dark, rough surfaces make much better emitters than bright, polished ones, and he

[4] J. Leslie, *Experimental Inquiry*, pp. 70–74.

[5] Dionysius Lardner in his *Treatise on Heat*, London, 1833, explicitly credits Leslie with the demonstration of the sine law for radiation, and William Whewell felt that Leslie's discovery was a major achievement (see *History of the Inductive Sciences*, 3rd ed., London, 1857, vol. ii, p. 394). But to my knowledge, no text after 1857 mentions the experimental discovery of this law.

produced an extensive compilation of emissive powers for various specific surfaces.[6] This study of emissivities has continued to carry the name of its author even into the twentieth century. Not only do almost all text-books on heat written prior to 1950 discuss the application of Leslie's Cube to the determination of the relative emissive powers of various substances, but two twentieth-century text-books (that of Poynting and Thomson, written in 1904, and that of Cork, written in 1933) even reproduce tables of Leslie's 1804 results;[7] thus they acknowledge their debt to a man and an instrument that have made possible a large portion of our knowledge of radiant heat.

One of the first and most important lines of research opened up by Leslie in 1804 in which Leslie's Cube saw continuing application during the nineteenth century was the study of diathermancy, or the transmission of heat through various media. Leslie had implicitly assumed that the heat transmitting properties of any given medium were independent of the temperature of the source of the heat being transmitted. But the first major extension and revision of his experimental work, instigated by François Delaroche in 1812, showed by the use of Leslie's own tools that this assumption was invalid. Delaroche compared the transmission of heat from sources at temperatures from 100° C to over 1760° C (including that from a Leslie's Cube at 100° C) to show that the relative amount of heat transmitted was a function of the temperature of the heat source[8] and, thus, that the nature of heat radiation must be temperature dependent.

The works of Macedonio Melloni, begun in 1832, extended those of Delaroche by confirming that the transmission of heat was a function of the temperature of the source and by indicating that different substances transmit heat selectively; i.e., if one substance transmits more radiation from an incandescent source than another, it might, nonetheless, transmit less heat from a cooler source.[9] Much of Melloni's early work was done with a cylindrical Leslie's Vessel constructed of copper rather than tin as one of four heat sources (along with a blackened copper plate at 360° C, incandescent platinum heated in an alcohol lamp, and a Locatelli Lamp).

Leslie's Cube was, moreover, the principal heat source used in John Tyndall's early studies of the transmission of heat through gases. Leslie had concluded on the basis of crude observation that air transmitted nearly 100 per cent of the heat radiated from his Cube. Using an apparatus involving balanced radiations from two Leslie's Cubes (Fig. 2),

[6] J. Leslie, *Experimental Inquiry*, pp. 76–95.

[7] Poynting and Thomson, *A Text Book of Physics: Heat*, London, 1906, p. 226; J. M. Cork, *Heat*, New York, 1933, p. 149 (the tables seem independent of one another).

[8] F. Delaroche, *Journal de Physique*, 1812, **75**, 201.

[9] M. Melloni, *Taylor's Scientific Memoirs*, 1837, vol. i, p. 45.

Tyndall confirmed Leslie's opinion about air and discovered that some gases were much poorer transmitters.[10] Later he showed that if the source radiated at 300° C rather than at 100° C air and its constituents, oxygen, nitrogen and hydrogen, did attenuate the transmitted heat perceptibly (about 0·3 per cent as much as olefiant gas or ammonia).[11]

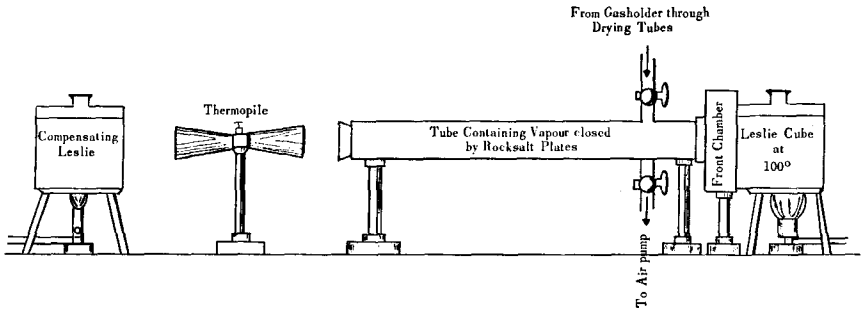

Figure 2. Tyndall's experiment to determine heat transmitted through a gas.

Another major problem to which Leslie's Cube was applied by subsequent investigators was the demonstration of the proportionality of emissive and absorptive powers for any given surface. In 1804, Leslie announced, on the basis of experiments in which a given kind of surface was used first as a source of radiation and then as an absorber, that the absorption and emission coefficients of any surface are equal;[12] but his evidence for this assertion was ambiguous at best. His experimental results showed, for instance, that although a polished tin surface *emitted* only one-eighth as much as a glass surface at the same temperature, it seemed to absorb one-fifth as much.[13] Following Leslie's lead, William Ritchie employed a Leslie's Cube and a specially constructed differential thermometer to show conclusively that absorptivity and emissivity are proportional.[14]

Ritchie's experimental configuration is shown in Fig. 3; a hot Leslie's Cube is placed between two bulbs of a differential thermometer; sides C and C′ are blackened while B and B′ are bright and metallic. The heat transferred to Bulb B′ will be proportional to the emissivity of C times the absorptivity of B′, while that transferred to C′ will be proportional to the emissivity of B times the absorptivity of C′. If e denotes emissivity

[10] J. Tyndall, *Proc. Roy. Inst.*, 1858–1862, **3**, 155.

[11] *Ibid.*, p. 295.

[12] J. Leslie, *Experimental Inquiry*, p. 24.

[13] *Ibid.*, pp. 18–22.

[14] W. Ritchie, *J. Roy. Inst.*, 1831, **2**, 305.

and a absorptivity, $a_C e_B = a_B e_C$ since the insertion of the hot cube does not change the equilibrium position of the differential thermometer. So $\frac{a_C}{e_C} = \frac{a_B}{e_B}$; i.e., the ratio of absorptivity to emissivity is a constant independent of the nature of the surface. Interestingly enough, Leslie's Cube is mentioned in text-books on heat in connexion with this simple demonstration, done first in 1831, more often than it is in connexion with any of the experiments Leslie performed himself.[15]

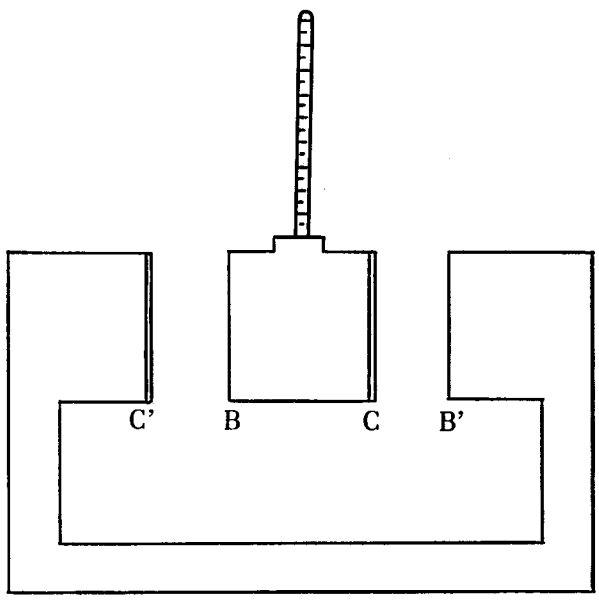

Figure 3. Diagram of Ritchie's experiment to show absorptivity and emissivity are equal.

The final major realm of application of Leslie's Cube of interest here was connected once more with the question of the temperature dependence of radiation. Leslie's first experiments with the Cube had confirmed Newton's law of cooling in the range 0° C to 100° C, that is, they had indicated that the heating effect of radiation given off by a hot body is proportional to the temperature differential between the radiator and the absorber (which in Newton's case was the ambient medium). But some

[15] See, for instance, Noakes, *A Textbook of Heat*, pp. 374–375, Poynting and Thomson, *A Textbook of Physics: Heat*, p. 232; and Cork, *Heat*, p. 150. The only reference in R. B. Lindsay, *General Physics for Students of Science*, New York, 1939, on p. 233, probably refers to Ritchie's experiment.

of the experiments done later by Leslie with a photometer called this law into question.[16] In 1817, P. Dulong and A. Petit took up the question of cooling rates and extended Leslie's photometric techniques to establish a new and widely used empirical law of cooling.[17] In turn, their law was revised and refined by Francesco Rosetti in 1879. Rosetti experimentally determined the law of cooling between 56·6° C and 296·6 °C by using a tin Leslie's Cube filled with water below 100° C and an iron Leslie's Cube filled with mercury in the upper part of the range.[18]

It was only with the work of Joseph Stefan—also done in 1879—that studies of the emission, absorption, and transmission of radiant heat began to diverge from the lines opened up seventy-five years earlier by John Leslie in his *Experimental Inquiry*.

[16] J. Leslie, *Experimental Inquiry*, p. 339.

[17] P. Dulong and A. Petit, *Ann. Chim. Phys.*, 1817, **17**, 113–154, 225–264, 337–367.

[18] F. Rosetti, *Phil. Mag.*, 1879, **8**, 328 and 329.